C-W1650S-B1 16 Ga. 1" Crown Stapler

Exploded View Diagram—Dec. 2017

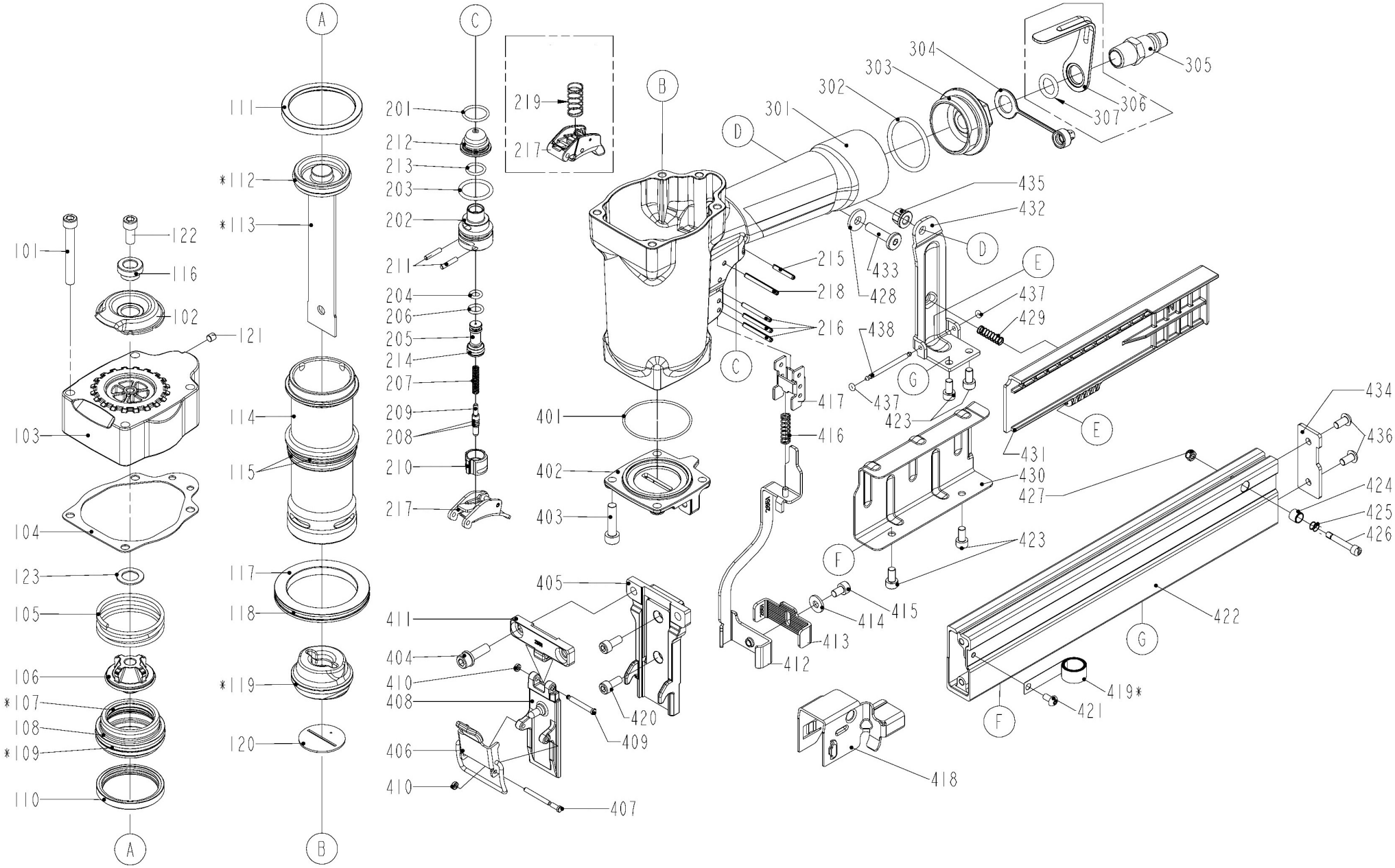

ITEM	PARTS NO	PARTS NAME	QTY	ITEM	PARTS NO	PARTS NAME	QTY
101	2040101-04141-0	HEX.SOC.HD.BOLT	4	303	11346-0951303-1	END CAP	1
102	11371-0084301-1	DEFLECTOR	1	304	1132L-0010001-1	AIR PLUG CAP	1
103	11369-1811301-1	CAP	1	305	1135V-0000007-1	AIR PLUG	1
104	11302-0824701-1	CYLINDER CAP SEAL	1	306	1133D-0784702-1	SPRING RETAINER	1
105	11360-0460001-3	COMPRESSION SPRING	1	307	2041106-02050-0	O - RING	1
106	11370-0820001-1	SEAL	1	401	2041109-05160-0	O - RING	1
107	2041104-04070-0	O - RING	1	402	11326-1744701-1	BASE	1
108	11368-0820001-2	HD.VALVE PISTON	1	403	2040101-04200-2	HEX.SOC.HD.BOLT	4
109	2041109-05030-0	O - RING	1	404	2040100-04010-2	BOLT ASSY	2
110	11399-0460002-1	COLLAR	1	405	11303-1814701-1	DRIVER GUIDE	1
111	1135J-0070001-1	PRESS RING	1	406	11244-0564701-1	LOCK HANDLE UNIT	1
112	2041104-04081-0	O - RING	1	407	1131K-1744701-1	PIN	1
113	11204-1810001-1	DRIVER UNIT	1	408	11352-1814701-1	DRIVER GUIDE COVER A	1
114	11320-0070005-1	CYLINDER	1	409	11324-1744701-1	FIXED PIN	1
115	2041104-05030-0	O - RING	2	410	1131D-0460001-1	URETHANE RETAINER	2
116	11381-0074702-1	WASHER	1	411	11353-1744701-1	DRIVER GUIDE COVER B	1
117	11321-0820001-1	CYLINDER SPACER	1	412	11256-1814701-1	SAFETY B UNIT	1
118	2041104-07020-0	O - RING	1	413	11331-1814701-1	SAFETY A	1
119	11327-1744701-1	BUMPER	1	414	2040202-03010-0	FLAT WASHER	1
120	11388-0564701-1	DRIVER GUIDE	1	415	2040101-03030-1	HEX.SOC.HD.BOLT	1
121	2040104-03010-0	HEX.SOC.HD.SCREW	1	416	11337-0084701-1	SAFETY SPRING	1
122	2040101-04030-2	HEX.SOC.HD.BOLT	1	417	11338-0074702-1	SAFETY GUIDE	1
123	11381-0100001-1	WASHER	1	418	11363-0564702-1	PUSHER	1
201	2041104-02060-0	O - RING	1	419	11372-0460001-1	SPRING	1
202	11374-0860001-1	PLUNGER CAP	1	420	2040101-03050-2	HEX.SOC.HD.BOLT	2
203	2041100-02050-0	O - RING	1	421	2040102-02010-2	HALF ROUND HD.HEX.BOLT	1
204	2041100-01070-0	O - RING	1	422	11389-1814701-2	MAGAZINE A	1
205	1133S-0860001-1	VALVE PLUNGER	1	423	2040101-03040-2	HEX.SOC.HD.BOLT	4
206	2041100-01050-0	O - RING	1	424	1132N-1740001-1	DEEP IMPACT SOCKET 1	1
207	11376-0860001-1	SPRING	1	425	11311-0074701-1	LATCH SPRING	1
208	2041108-01020-0	O - RING	2	426	11310-0564701-1	DOOR LATCH	1
209	11375-0860002-1	PLUNGER	1	427	2040500-02020-0	LOCK NUT	1
210	11373-0860001-1	TRIGGER VALVE HEAD	1	428	2040202-04010-0	FLAT WASHER	1
211	11329-0860001-1	PIN	2	429	11311-0104701-1	LATCH SPRING	1
212	1137A-0860001-1	COVER-PLUNGER	1	430	11314-1744701-1	STAPLERS BRACKET	1
213	2041104-02070-0	O - RING	1	431	11348-0070001-3	MOUNTING BRACKET	1
214	2041100-01030-0	O - RING	1	431	11348-1744701-1	MOUNTING BRACKET	1
215	2040401-05100-0	SPIRAL PINS	1	432	11323-1744701-1	POSITIONING SHEET	1
216	2040401-05150-0	SPIRAL PINS	3	433	1131H-1744701-1	FIXING BOLT	1
217	11224-0074701-1	TRIGGER UNIT(Bump Fire)	1	434	11397-1744701-1	GUIDE COVER	1
217	11224-1111101-2	TRIGGER UNIT(Sequential)	1	435	2040501-04010-0	BOLT CAP	1
218	2040401-05160-0	SPIRAL PINS	1	436	2040102-03020-2	HALF ROUND HD.HEX.BOLT	2
219	11376-0370001-1	SPRING	1	437	2041109-01010-0	O - RING	2
301	11230-007E801-1	GUN BODY UNIT	1	438	1135N-0074701-1	HINGE POINT	1
302	2041101-04020-0	O - RING	1	**KIT**	**11240-1810002-1**	**MAGAZINE ASSEMBLY**	**1**
KIT	**11204-1810002-1**	**DRIVER UNIT**	**1**	**KIT**	**11226-0860002-1**	**TRIGGER VALVE ASSEMBLY**	**1**
KIT	**11201-1811302-1**	**CAP ASSEMBLY**	**1**	**KIT**	**7USAX-3007002-1**	**BELT HOOK**	**1**